DEWERT OKIN
A Phoenix Mecano Company

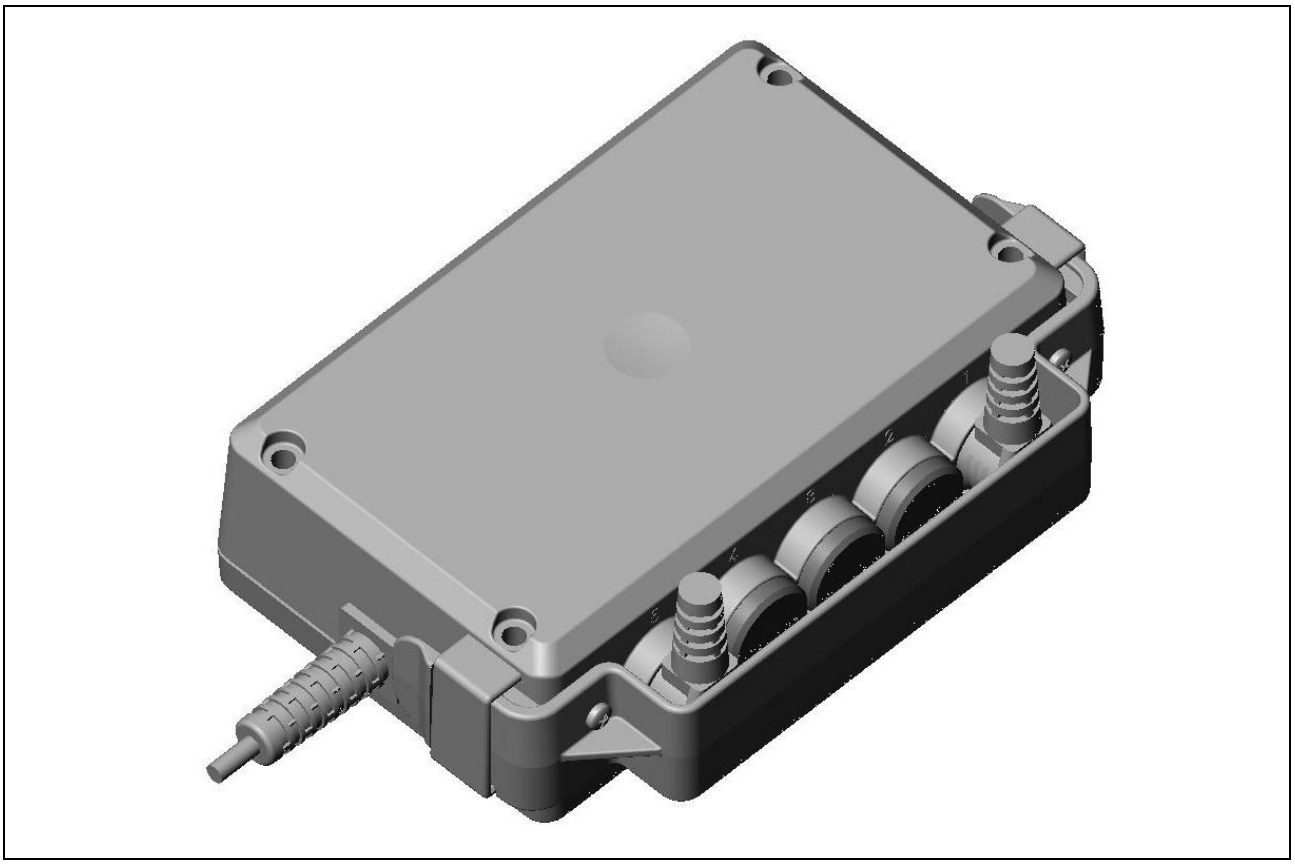

CU155 DC-ADAPTER

Installation Instruction

(Original installation instruction, translation)

Foreword

Disclaimer and exclusion of liability

DewertOkin is not responsible for damage resulting from:

- failure to observe these instructions,
- changes made to this product which have not been approved by DewertOkin, or
- the use of replacement parts which have not been approved or manufactured by DewertOkin.

Contact address

DewertOkin GmbH
Weststraße 1
32278 Kirchlengern
Germany
Tel: +49 (0)5223/979-0
Fax: +49 (0)5223/75182
http://www.dewertokin.de
Info@dewertokin.de

Creation of a complete operating instruction manual for the entire end product

These instructions are only intended to be used by the end-product manufacturer. They should not be given to the operator of the end product. The factual information contained within may be used as a basis when creating the end-product manual.

The warning and danger notices may be particularly suited for use in the end-product's manual. However it is not sufficient to simply follow these notices. You should also carry out an internal risk assessment for your end product. This can then be used as the basis for the safety notices in your manual.

Table of Contents

1. General

1.1 About these installation instruction

This installation instruction must be followed in order to install the CU155 DC-ADAPTER successfully and safely in the end product. This instruction is not an operating manual for the end product.

This instruction will help you to minimize danger, repair costs and down times. They will also help you to maximize the reliability and lifespan of the end product.

	CAUTION
	The notices in this instruction must be followed! Their observance during installation and connection will help to minimize • the risk of accident and injury, and • damage to the CU155 DC-ADAPTER or the end product.

This installation instruction has been written with due care and attention. However, unless otherwise required by law, we do not guarantee that the data, images and drawings are accurate or complete nor do we accept liability for their contents.

➢ We reserve the right to make unannounced technical changes in the course of our continual product improvement process!

1.2 Conventions used

Notices which do not relate to safety are indicated in these instructions with a triangular symbol:

➢ Notice symbol

Explanations of warning notices

	DANGER
	DANGER indicates a hazardous situation which, if not avoided, will result in serious injury or death.

	WARNING
	WARNING indicates a hazardous situation which, if not avoided, could result in serious injury or death.

	CAUTION
	CAUTION indicates a hazardous situation which, if not avoided, could result in minor or moderate injury.

	NOTICE
	NOTICE is used to address practices which are not related to personal injury but may result in damage to the product or surroundings.

2. Safety Notices

2.1 Proper and intended usage

The CU155 DC-ADAPTER is intended to be installed in an end product. It can be used as follows:

- for connecting an additional peripheral device (e.g. a weighing system) using a DIN-41529 plug
- for connecting a LED lamp with DIN 41529 plug (for example, for reading lamps).

⚠	**CAUTION** The CU155 DC-ADAPTER should only be used for the applications described above. Any other application is not permitted and can lead to accidents or damage to the unit. Such non-approved applications will lead immediately to the expiration of all guarantee and warranty claims on the part of the end-product manufacturer against DewertOkin.

2.1.1 Improper usage

Be sure to follow the notices below concerning improper usage. You should include them in your product manual in order to inform your end product users.

⚠	**WARNING** The CU155 DC-ADAPTER should not be used: • in any environment where combustible or explosive gases or vapours (e.g., anaesthesiology) may be present, • in a moist environment, or • outdoors.

⚠	**CAUTION** The CU155 DC-ADAPTER may not be operated: • by small children, • by frail or infirmed persons without supervision, or • in the proximity of small children.

⚠	**CAUTION** You should only use spare parts which have been manufactured or approved by DewertOkin. Only these parts will guarantee a sufficient level of safety.

2.2 Selection and qualification of personnel

The CU155 DC-ADAPTER should only be installed into the end product by someone who has completed training in electronic motor assembly or has equivalent qualifications.

You should only install the CU155 DC-ADAPTER when you are qualified to do so. Otherwise, a properly qualified person should be found for this task.

2.3 Notice on safety during operation

Basic safety rules must be followed in order to ensure that the end product can be continually operated in a safe manner. These rules must be observed while using the end product and while installing the CU155 DC-ADAPTER.

These rules and safety measures can be categorized as follows:

- construction measures before the installation (refer to the "Ensuring operational reliability during installation” section in the chapter "Installation"),
- safety fundamentals during the CU155 DC-ADAPTER installation and during cable and wire routing (refer to the "Elektrischer Anschluss" section in the chapter "Installation"),
- basic safety rules during operation (refer to the chapter "Notices for operation"), and
- the creation of a manual for the end product which contains these and other safety rules.

2.3.1 Creating a user's manual

The manufacturer of the end product must create a manual for the user of that product. The safety notices in the end-product manual must be written based on the end product's risk assessment.

2.4 Product labelling

2.4.1 Type label

A type label on each CU155 DC-ADAPTER specifies the exact name and serial number, it also states the technical specifications valid for that particular CU155 DC-ADAPTER. The following illustration shows where the specifications are located on the type label of the CU155 DC-ADAPTER.

- The type label shown is an example; the specifications for your CU155 DC-ADAPTER may differ from this illustration.

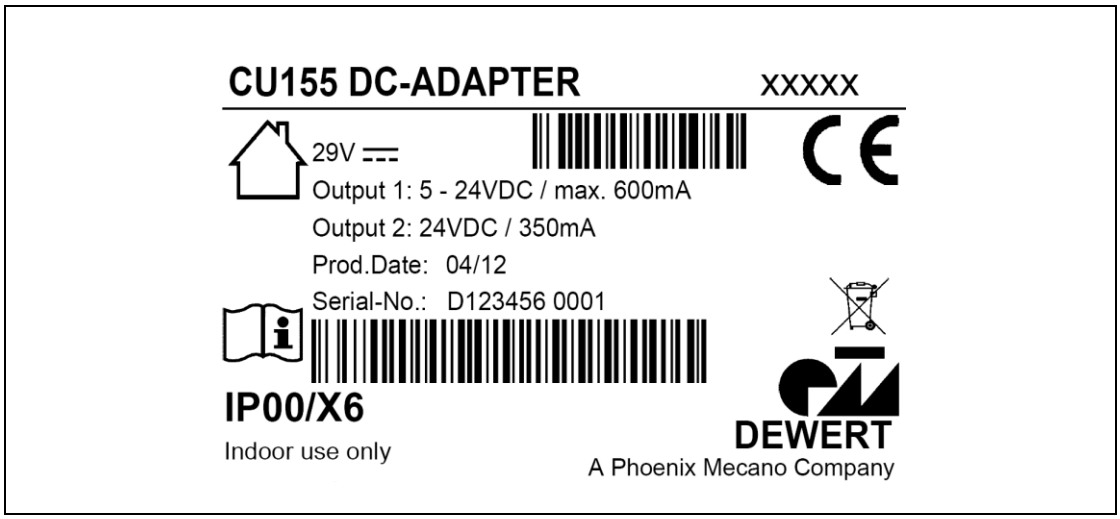

Figure 1 Type label for the CU155 DC-ADAPTER (example)

CU155 DC-ADAPTER	Model name
xxxxx	ID No.
29V ⎓	Input voltage
Output 1: 5 – 24VDC / max. 600 mA	Output voltage / max. output current
Output 2: 24VDC / 350mA	Output voltage / max. output current
Baujahr (Prod.Date)	Week / year
Seriennr. (Serial-No.)	Serial number for the CU155 DC-ADAPTER
IP00/X6	IP protection level
	Use in dry rooms only!
	Follow special assembly instructions!
CE	Mark of CE conformity
	Follow special disposal instructions!

3. Description of components

The CU155 DC-ADAPTER is a component that is connected to a controller for supplying power to an additional peripheral device (such as a weighing system) and/or to an LED lamp.

- A peripheral device (5 VDC / 9 VDC / 12 VDC or 24 VDC / max. 600 mA) can be connected to the CU155 DC-ADAPTER using a DIN-41529 plug. One standard LED lamp (24 VDC / max. 350mA) can also be connected using DIN 41529 plugs.
- We reserve the right to make unannounced technical changes in the course of our continual product improvement process!

3.1 Device components

The CU155 DC-ADAPTER consists of housing with connections, rotary control switch for voltage adjustment and a shield cover for protecting the sockets.

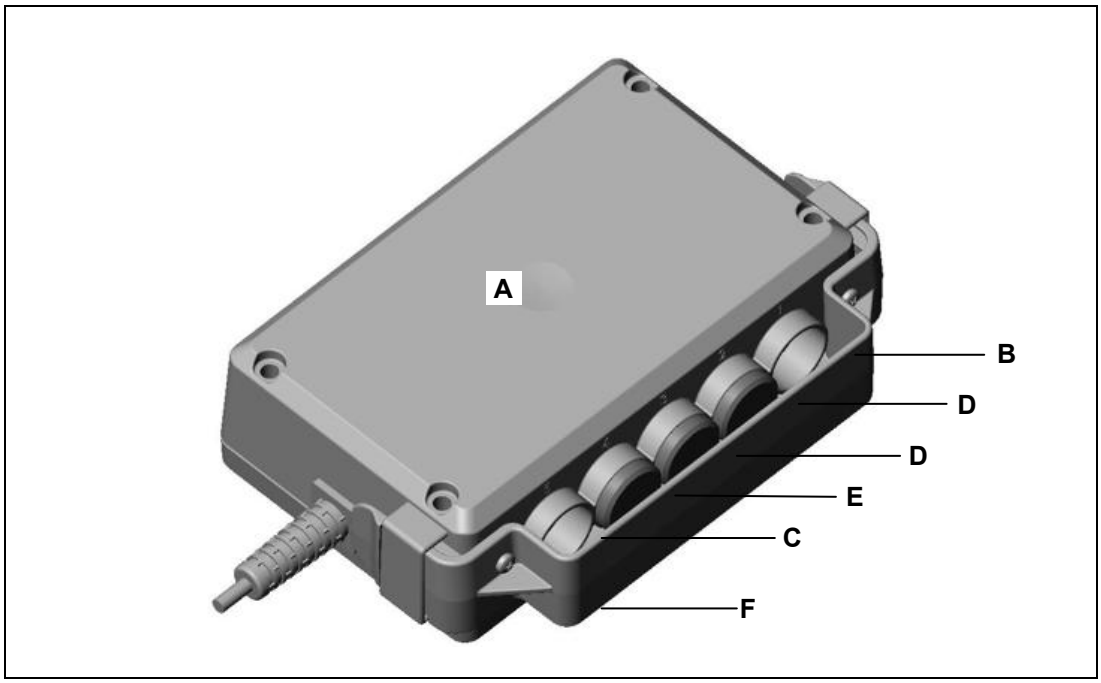

Figure 3 CU155 DC-ADAPTER

A CU155 DC-ADAPTER

B Connection socket for LED lamp

C Configurable connection for the peripheral device

D Two dummy plugs

E Rotary control switch for voltage adjustment behind one dummy plug

F Shield cover for protecting sockets

3.2 Layout of the CU155 DC-Adapter connections

Refer to the sticker on the CU155 DC-Adapter for details about layout and positioning of the connections. The sticker is located above the sockets. It indicates the proper type of connections. The layout of the connection scheme is individual and depends on the system specifications. Figure 4 is only an example and shows you where the label is attached.

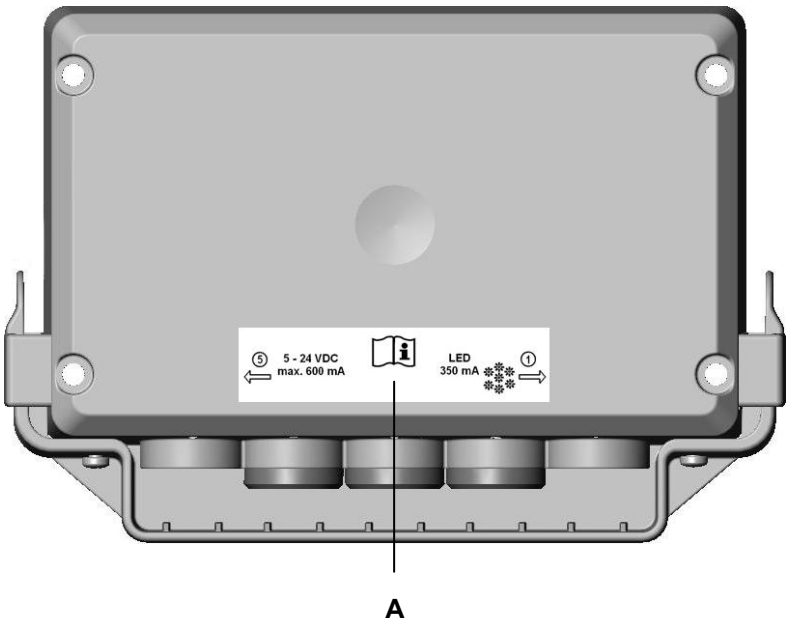

Figure 4 Position of the connection layout sticker on the CU155 DC-ADAPTER

A Layout of the connection scheme

	NOTICE
!	Only connect the components according to the specifications found on the sticker on the CU155 DC-Adapter. Any other arrangement of connections may damage the CU155 DC-Adapter. Please follow all notices found in these installation instructions.

4. Technical Specifications

4.1 CU155 DC-ADAPTER

Input voltage	29VDC
Current consumption	max. 1,5A
Output voltage on socket 1	24VDC
Output current on socket 1	max. 350mA
Output voltage on socket 5	5VDC, 9VDC, 12VDC or 24VDC adjustable using a rotary control switch
Output current on socket 5	max. 600mA (depending on position of rotary control switch)
Rotary control switch	Position: 1 => 5VDC 2 => 9VDC 3 => 24VDC 0 => 12VDC
Type of connection	LSP socket (DIN 41529)
Protection class	III
Protection category	IP00/X6 **Protection category IPX6:** Only when using mounted plugs with O rings, sockets sealed with dummy plugs, and attached the shield cover for protecting sockets
Colours	grey
Dimensions and weight	
Length x width x height	157mm x 107mm x 44mm
Weight	approx. 0,3kg
Ambient conditions for operation, storage and transport	
Transport / storage temperature	from -20°C to +50°C from -4°F to +122°F
Operating temperature	from +10°C to +40°C from +50°F to +104°F
Relative humidity	from 30% to 75%
Air pressure	from 800hPa to 1060hPa
Altitude	< 2000m

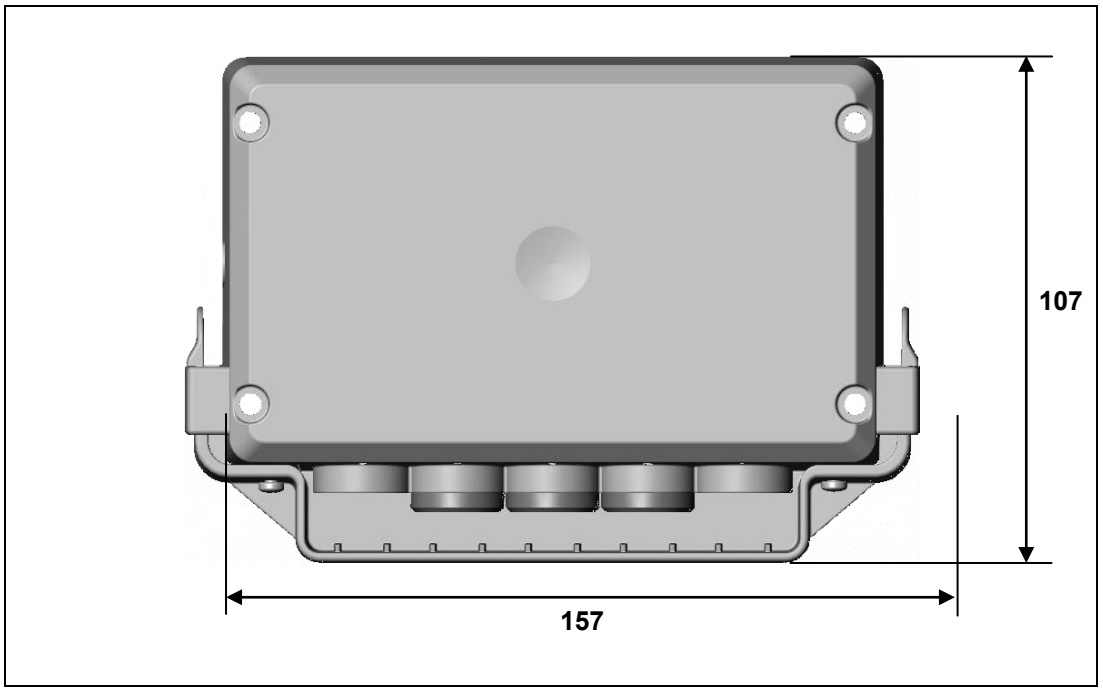

Figure 5 Top view CU155 DC-ADAPTER, (dimensions in mm)

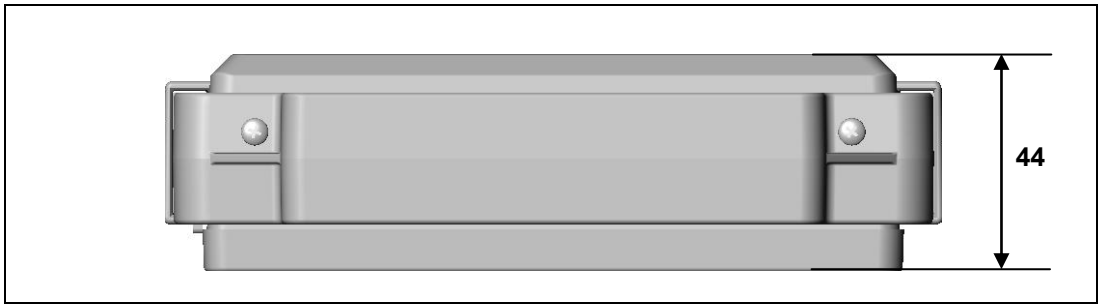

Figure 6 Front view CU155 DC-ADAPTER, (dimensions in mm)

5. Installation

5.1 Safety notices to observe during installation

Basic safety rules must be followed in order to ensure that the end product can be continually operated in a safe manner. These rules must be observed while using the end product and while installing the CU155 DC-ADAPTER.

5.1.1 Ensuring operational reliability during installation

The safety and reliability of the end product containing DewertOkin components can be ensured by using the proper construction methods described below.

	ACHTUNG
!	Do not remove the dummy plugs from the sockets 2 and 3 on the CU155 DC-ADAPTER. Only remove the dummy plug from connecting socket 4 when adjusting the output voltage for connecting socket 5. After the voltage is set, you must re-attach the dummy plug in order to preserve the IPX6 protection category.

Overcurrent

The CU155 DC-ADAPTER is protected from overcurrent by a safety fuse.

Mechanical construction

A shield covering protects the sockets 1 and 5 from mechanical damage and accidental unplugging.

5.2 Installation procedure

Before installing the CU155 DC-ADAPTER, make sure that you are observing all of the safety notices found in the "Safety notices to observe during installation" section.

5.2.1 Installation and dismounting for the CU155 DC-ADAPTER

⚠	**CAUTION** Assembly and disassembly should only be done where the drive is not supporting a load!

There are four mounting holes in the CU155 DC-ADAPTER which can be used to attach it to the end product with the appropriate screws (for example, M4 x 50 screws). The CU155 DC-ADAPTER should be mounted so that it lies flat against its supporting material. In the end product, no mechanical forces (such as torsion) should be put on the CU155 DC-ADAPTER or enclosure. Such forces could lead to damage (such as cracks) in the housing.

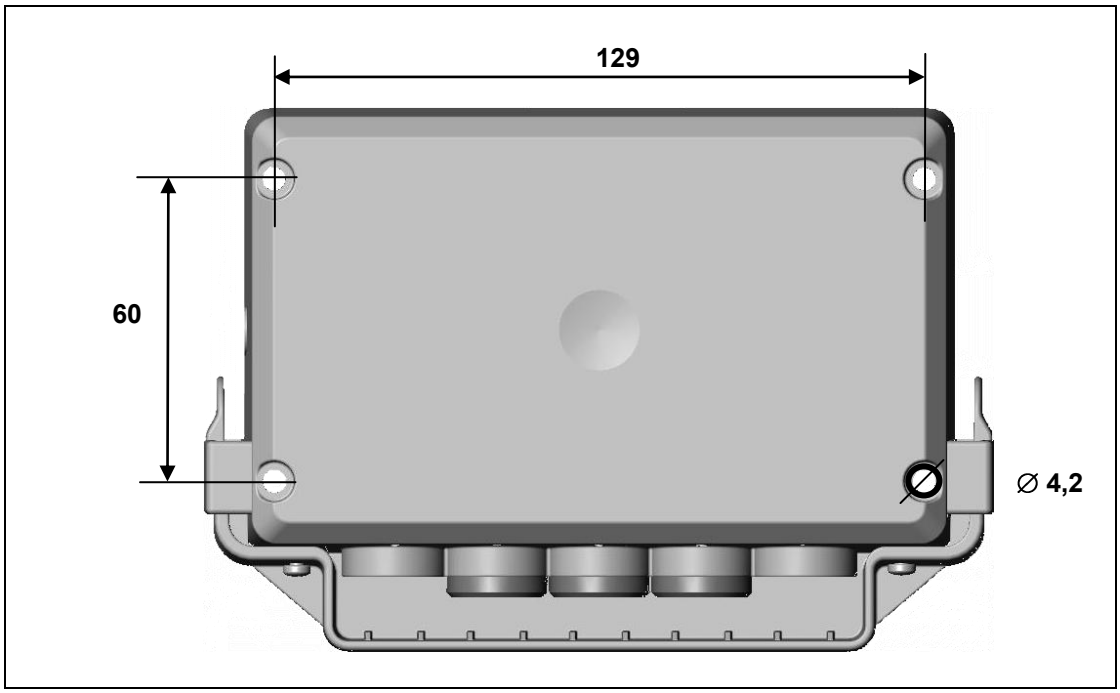

Figure 7 Mounting holes of the CU155 DC-ADAPTER (dimensions in mm)

5.2.2 Mounting the shield cover over the sockets

The shield cover is attached to the CU155 DC-ADAPTER by snapping it into the guide slots. It can also be attached more securely to the CU155 DC-ADAPTER using suitable screws (ST 2.9 x 6.5; ISO 7049).

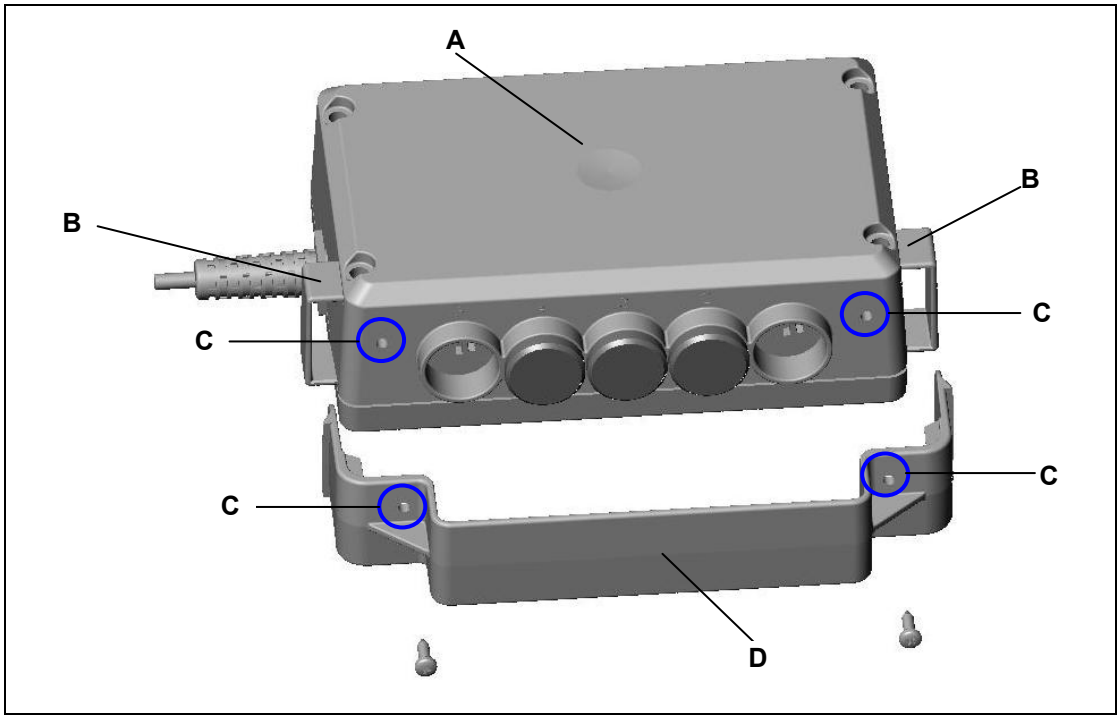

Figure 8 Shield cover for the CU155 DC-ADAPTER

A CU155 DC-ADAPTER
B Guide slots
C Holes for screws
D Shield cover for protecting sockets

5.2.3 Connecting the peripheral devices or LED lamp

1. If necessary, unscrew both screws on the shield cover.
2. Pull out the shield over from the guide slots.
3. Connect the peripheral device or LED lamp to a free socket (refer to the "Description of component" section found in the "Layout of the connections" Chapter).

	NOTICE
!	Only use DIN-41429 angle plugs with extra rubber seals when connecting the peripheral devices or LED lamps.

4. The shield cover is attached to the CU155 DC-ADAPTER by snapping it into the guide slots.
5. If necessary, screw both screws for the shield cover back into the CU155 DC-ADAPTER.

5.2.4 Elektrischer Anschluss

⚠	**CAUTION** Electrical components should be connected or disconnected only when the mains power cord is unplugged.

Routing electrical cables

When routing the cables, be sure that:

- the cables cannot get jammed,
- no mechanical load (such as pulling, pushing or bending) will be put on the cables, and
- the cables cannot be damaged in any way.

Fasten all cables (especially the connecting cables) to the end product using sufficient strain relief and kink prevention methods. Be sure that the design of the end product prevents the connecting cables from coming into contact with the floor during transport.

5.2.5 Connecting to the power supply

⚠	**CAUTION** You should only connect and disconnect the cables when they are completely disconnected from any live current!

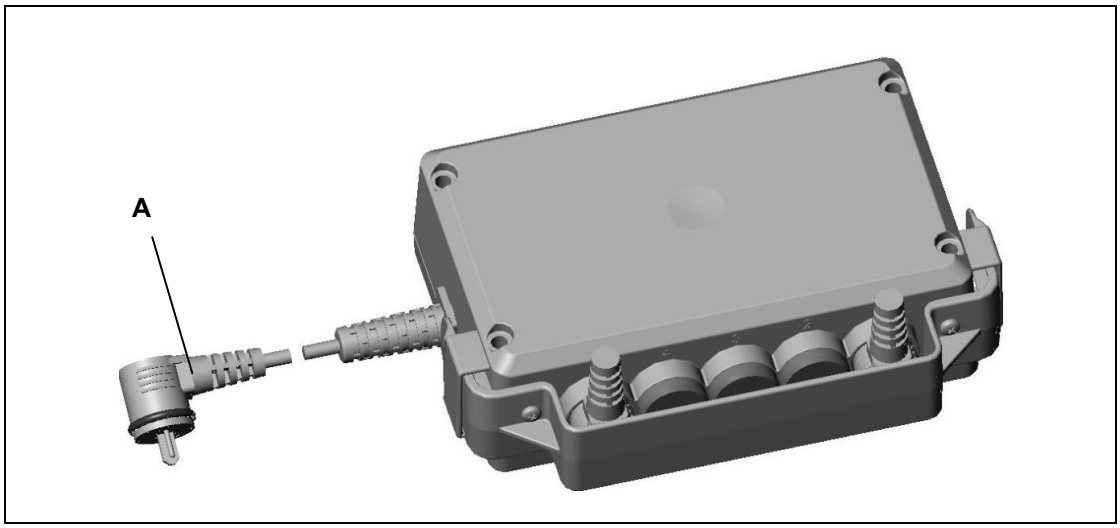

Figure 9 CU155 DC-Adapter with connection cable

A Connection cable with LSP plug

1 Connect the cable's LSP plug to the power supply (e.g MCL II control unit using a pigtail).

!	**NOTICE** Be sure to use the proper input voltage.

5.2.6 Adjust the output voltage for the peripheral devices

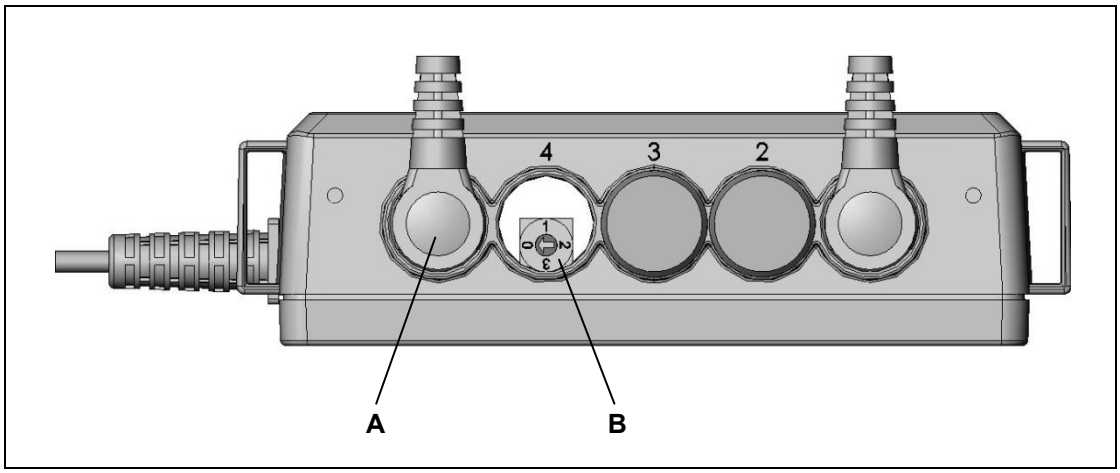

Figure 10 CU155 DC-Adapter with rotary control switch

A Adjustable connection for peripheral device on socket 5

B Rotary control switch for setting voltage on socket 5

1 If necessary, unscrew both screws on the shield cover.

2 Pull out the shield over from the guide slots.

3 Remove the dummy plug off of socket 4

4 Use a screwdriver to set the proper voltage for your peripheral device.

Position 1 => 5VDC
2 => 9VDC
3 => 24VDC
0 => 12VDC

1 Re-attach the dummy plug to socket 4

2 Connect your peripheral device.

3 The shield cover is attached to the CU155 DC-ADAPTER by snapping it into the guide slots.

4 If necessary, screw both screws for the shield cover back into the CU155 DC-ADAPTER.

	NOTICE
	After the voltage is set, you must re-attach the dummy plug in order to preserve the IPX6 protection category.

6. Notices for operation

The factual information contained within may be used when you are creating the end-product manual. The installation instructions do not contain all information required for the safe operation of the end product. They only describe the assembly and operation of the CU155 DC-ADAPTER as a partially assembled piece of machinery.

⚠	**CAUTION**
	When creating the operating instructions, remember that the installation instructions are intended for qualified specialists and are not for typical users of the end product.

6.1 General notice

- Only drive and drive control units from DewertOkin should be connected to the CU155 DC-ADAPTER since they have already been verified to work together.
  - Only those LED lamps and peripheral devices which comply with the technical specifications provided here should be connected to the CU155 DC-ADAPTER.

Avoiding cable damage

Be sure that your operating instructions inform the user about the possible cable risks.

⚠	**CAUTION**
	The cables (particularly the connecting cable) should not be run over. In order to prevent injuries or damage to the CU155 DC-ADAPTER, no mechanical strain should be placed on the cables.

7. Troubleshooting

This chapter describes troubleshooting methods for fixing problems. If you experience an error that is not listed in this table, please contact your supplier.

	CAUTION
	Only qualified specialists who have received electrician training should carry out troubleshooting and repairs.

Problem	Possible cause	Remedy
The drive or control unit is not functioning	There is no mains supply voltage	Connect the mains power
	The drive or control unit is defective.	Please contact your supplier or sales agent
The drive is suddenly no longer capable of movement.	The thermal fuse on the transformer may have been triggered	Please contact your supplier or sales agent
	The device fuse may have been triggered	Please contact your supplier or sales agent
	There is no mains supply voltage	Connect the mains power
	The power feed (from the mains) has been interrupted	Check the lead-in connections and re-seat the contacts if required
Peripheral device / LED lamp is not functioning	There is no mains supply voltage	Connect the mains power
	The power feed (from the mains) has been interrupted	Check the lead-in connections and re-seat the contacts if required
	The fuse into the CU155 DC-ADAPTER may have been triggered	Please contact your supplier or sales agent

8. Maintenance

	CAUTION
	You should only use spare parts which have been manufactured or approved by DewertOkin. Only these parts will guarantee a sufficient level of safety.

8.1 Maintenance

Type of check	Explanation	Time interval
Check the function and safety of the electrical system	A qualified electrician should carry out this inspection. (Refer to the "Electrical connection" section in the "Installation" chapter.)	Periodic inspections can be carried out at intervals based on the risk assessment which you conduct for your end product
Periodic visual inspection for housing damage	Check the housing for breaks or cracks	At least every six months
Periodic visual inspection of the plug-in connections and electrical access points for damage	Check that all electrical cables and connections are firmly seated and correctly positioned	At least every six months
Periodic visual inspection for cable damage	Check the connecting cables for pinching or shearing. Also check the strain relief and kink protections mechanisms, in particular after any mechanical load	At least every six months

8.2 Cleaning and care

The CU155 DC-ADAPTER was designed so that it would be easy to clean. Its smooth surfaces can be conveniently cleaned.

	NOTICE
	Never clean the CU155 DC-ADAPTER in an automated washing system or with a high-pressure cleaner. Do not allow fluids to penetrate the drive. Damage to the drive could result. Do not use a cleanser that contains benzene, alcohol or similar solvents.

1. Always disconnect the mains power plug from the power supply before you start to clean!
2. Clean the CU155 DC-ADAPTER using a dry cloth.
3. Be sure that you do not damage the connecting cables during the cleaning.

9. Disposal

The CU155 DC-ADAPTER consists of electronic components, cables and metal and plastic parts. You should observe all corresponding national and regional environmental regulations when disposing of the CU155 DC-ADAPTER.

The disposal of the end product is regulated in Germany by Elektro-G, internationally by the EU Directive 2012/19/EC (WEEE), or by any applicable national laws and regulations.

The CU155 DC-ADAPTER should not be disposed of with normal household waste!

EG-Konformitätserklärung

EU Declaration of Conformity

Nach Anhang IV der EMV-Richtlinie 2014/30/EU

In compliance with Appendix IV of the EMC-Directive 2014/30/EU

Nach Anhang IV der EU-Niederspannungsrichtlinie 2014/35/EU

In compliance with Appendix IV of the LVD-Directive 2014/35/EU

Nach Anhang VI der RoHS-Richtlinie 2011/65/EU (inkl. Delegierte Richtlinie (EU) 2015/863)

In compliance with Appendix VI of the EU RoHS Directive 2011/65/EU (incl. Commission delegated Directive (EU) 2015/863)

Der Hersteller

The manufacturer

DewertOkin GmbH
Weststraße 1
32278 Kirchlengern
Deutschland - *Germany*

erklärt hiermit, dass das Produkt

declares that the following product

CU155 DC-ADAPTER

mit DewertOkin-Spannungsversorgung / with DewertOkin *power supply unit*

die Anforderungen folgender EG-Richtlinien erfüllt:

meets *the requirements of the following EU directives:*

Richtlinie über elektromagnetische Verträglichkeit 2014/30/EU

Electromagnetic *Compatibility Directive 2014/30/EU*

Niederspannungsrichtlinie 2014/35/EU

Low *Voltage Directive 2014/35/EU*

DELEGIERTE RICHTLINIE (EU) 2015/863 DER KOMMISSION vom 31. März 2015 zur Änderung von Anhang II der Richtlinie 2011/65/EU des Europäischen Parlaments und des Rates hinsichtlich der Liste der Stoffe, die Beschränkungen unterliegen.

COMMISSION DELEGATED DIRECTIVE (EU) 2015/863 of 31 March 2015 amending Annex II to Directive 2011/65/EU of the European Parliament and of the Council as regards the list of restricted substances.

Angewendete Normen

Applied standards:

- EN 60335-1:2012/A11:2014
- EN 55014-1:2006/A1:2009/A2:2011
- EN 55014-2:1997/A1:2001/A2:2008
- EN 61000-3-2:2014
- EN 61000-3-3:2013
- EN 62233:2008

Konstruktive Änderungen, die Auswirkungen auf die in der Montageanleitung angegebenen technischen Daten und den bestimmungsgemäßen Gebrauch haben, das Produkt also wesentlich verändern, machen diese Konformitätserklärung ungültig!

This declaration of conformity is no longer valid if constructional changes are made which significantly change the drive system (i.e., which influence the technical specifications found in the instructions or the intended use)!

Kirchlengern, Germany 25 November 2019

Dr.-Ing. Josef G. Groß
Geschäftsführer / Managing Director

DEWERT OKIN

A Phoenix Mecano Company

DewertOkin GmbH
Weststraße 1
32278 Kirchlengern - Germany
Tel: +49 (0)5223/979-0
Fax: +49 (0)5223/75182
http://www.dewertokin.de
Info@dewertokin.de

ID-Nr.: 72810